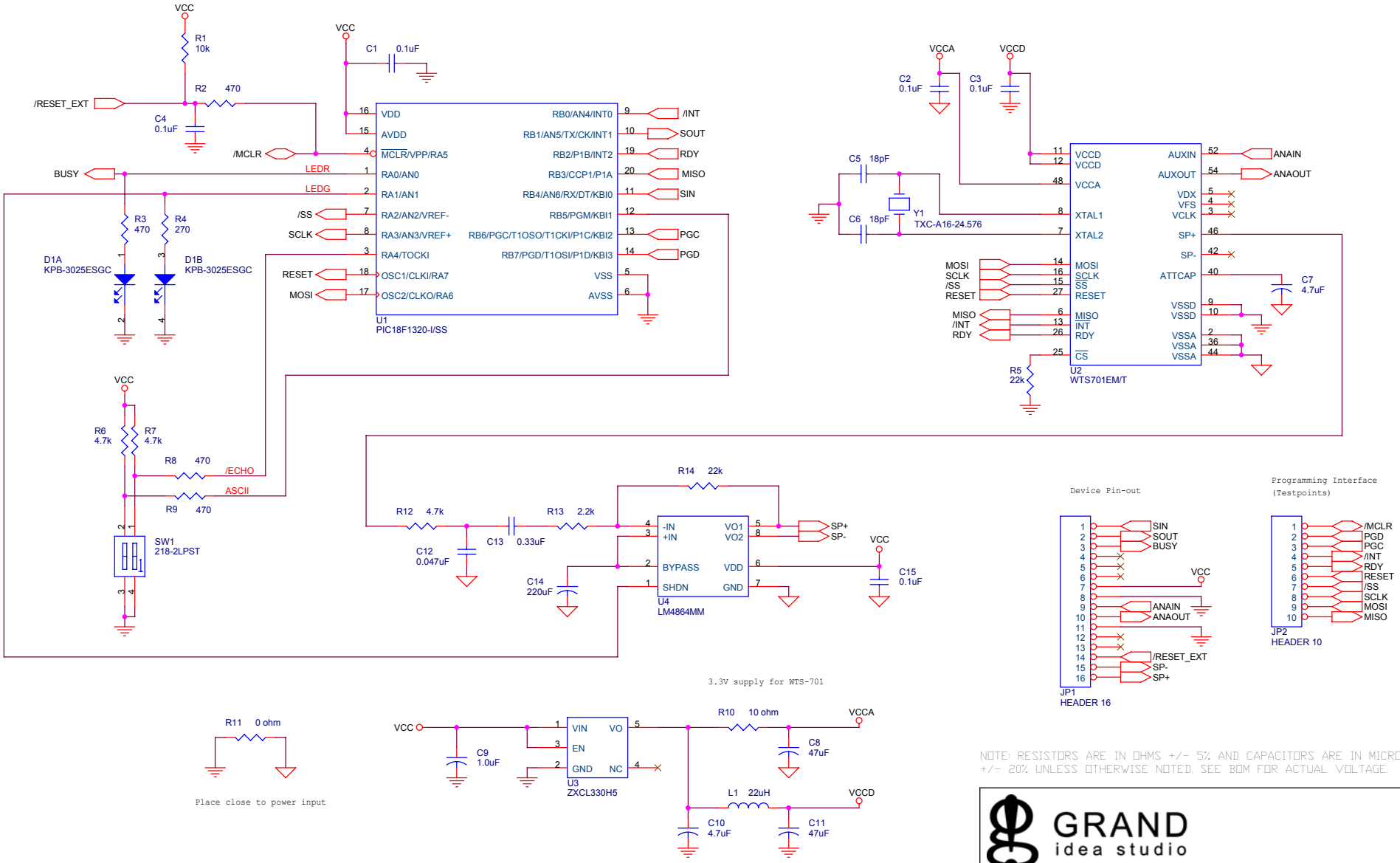

NOTE: RESISTORS ARE IN OHMS +/- 5% AND CAPACITORS ARE IN MICROFARADS +/- 20% UNLESS OTHERWISE NOTED. SEE BOM FOR ACTUAL VOLTAGE.

GRAND idea studio

TITLE			
Emic Text-to-Speech Platform: Parallax			
DATE	SIZE	DRAWN BY	REV
Friday, December 19, 2003	B	SHT 1 OF 1	J. Grand	A