AWESOME ELECTRONICS WORKSHOP

7/23/07

RF MODULES (& HAVING FUN W/ SOUND)

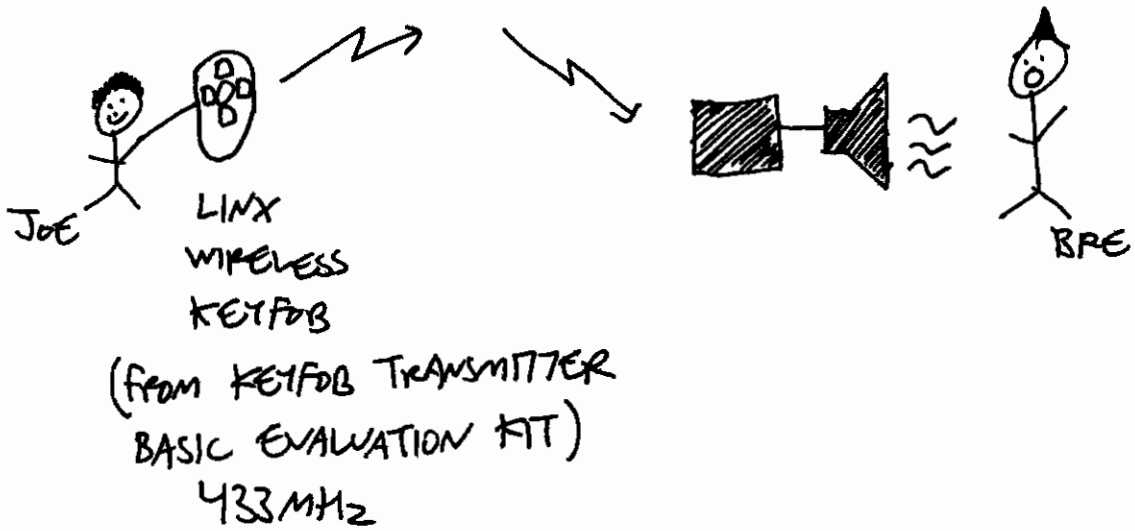

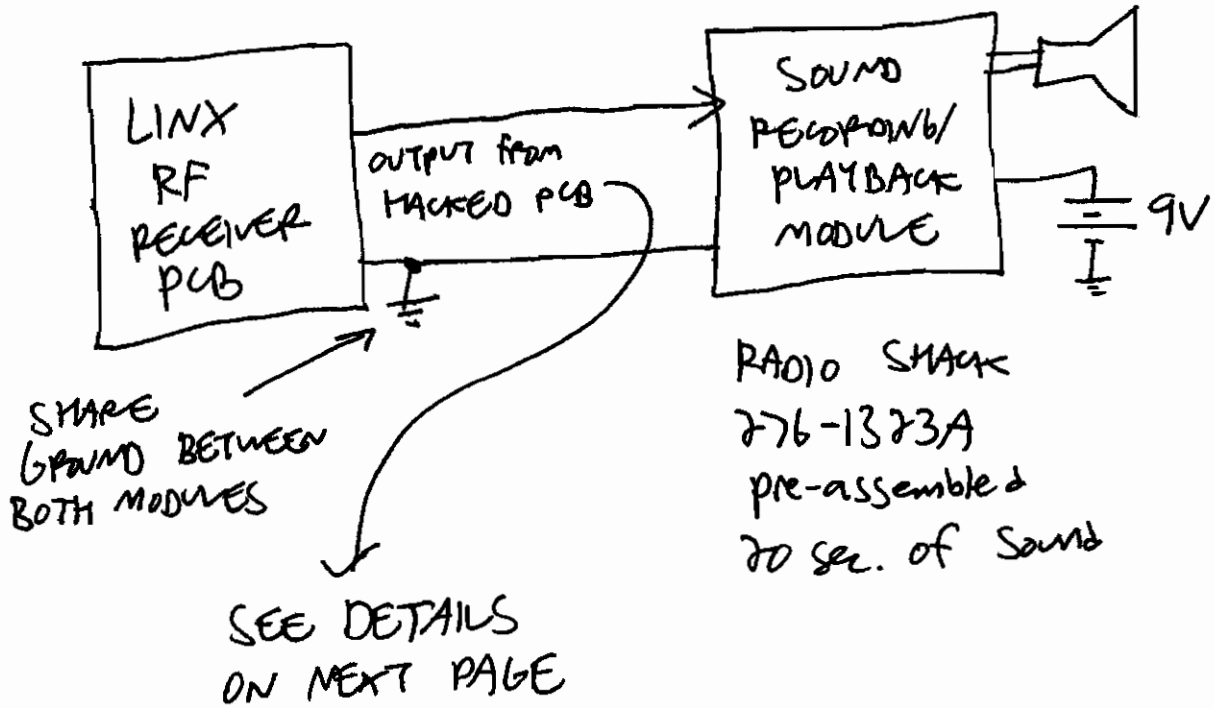

7/23/07

HACK FOR
AWESOME ELECTRONICS WORKSHOP

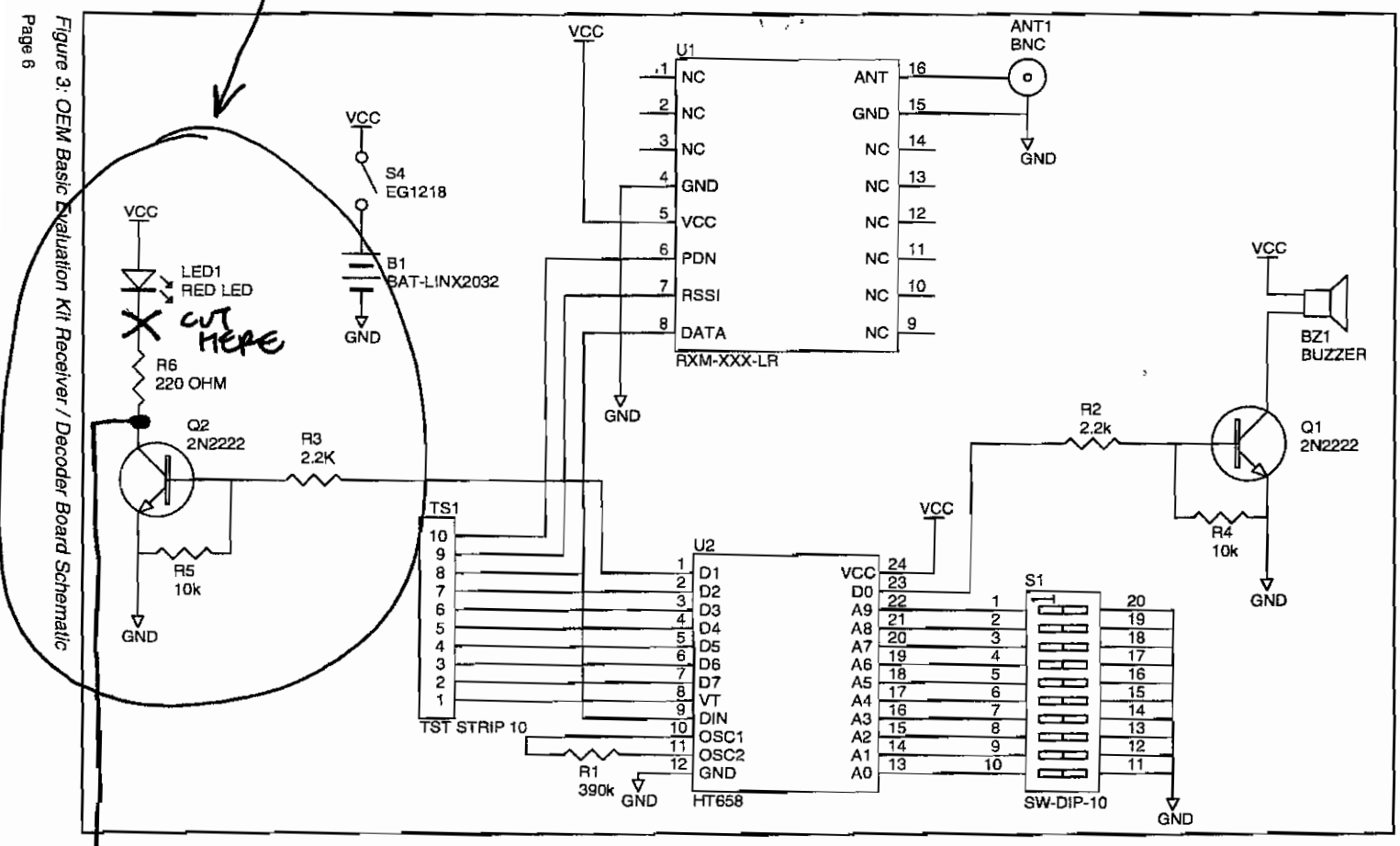

Figure 3: OEM Basic Evaluation Kit Receiver / Decoder Board Schematic

CONNECT TO R3 ON
RADIO SHACK SOUND MODULE